+1 (833) 975-3777
www.worldsportsusa.com
sales@worldsportsusa.com
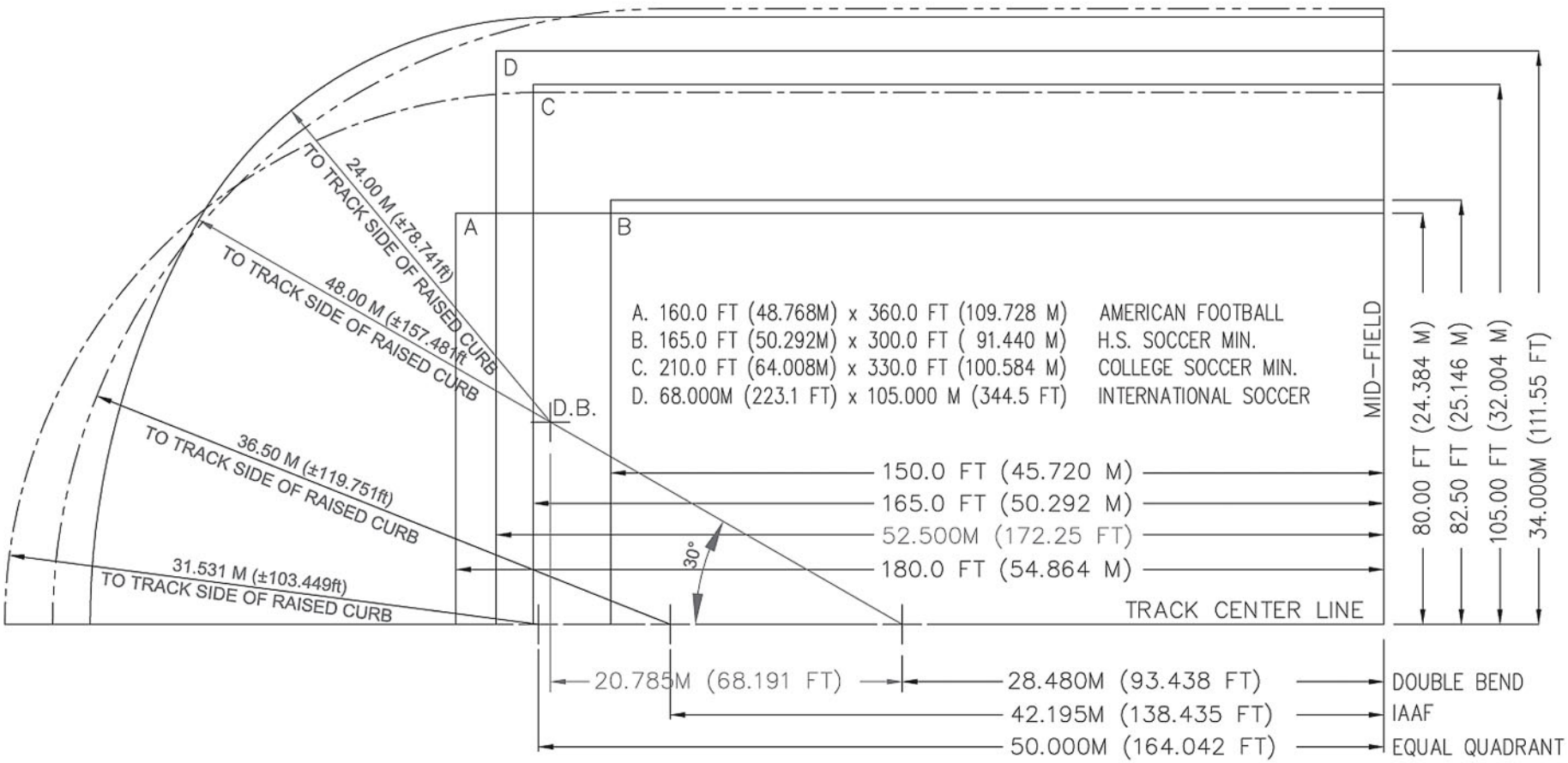
Track/Field Configuration